11th Iranian and 2nd Regional Tunnelling Conference
"Tunnels and the Future"
2-5 November 2015

New Approach in Tunneling Construction Using the Forepooling Technique

Masoud Ghaemi, Alireza Khalili, Majid Matloobi, Ahmad Faramarzi

phD Candidate in Rock Mechanic, Engineer Sepasad Group, Coach of Shams University, M.ghaemi65@gmail.com

Student of Geotechnic, Shams Higher Education Institute, Gonbad-e Kavus, alireza69khalili@yahoo.com

Engineer Sepasad Group, Ahmadfaramarziy@yahoo.com

Engineer Sepasad Group, Matloobimajid@yahoo.com

ABSTRACT

Austrian Tunneling is mainly applicable for big section tunnels. The tunnel is excavated step by step in this technique. Furthermore, forepoling, jet grouting and freezing are the techniques applied to construct falling tunnels; however, Austrian tunneling should not be used alone in medium section tunnels such as water conveyance tunnel and falling tunnels. As a result, the authors have introduced a new technique called *Right-Left technique*. In this technique, first forepoling, also known as tube umbrella, was used to strengthen tunnel. Then, having divided tunnel into two left and right sections, the right section was excavated exactly the size of half a steel frame and shotcrete technique was immediately used. The same technique was applied to the left section. Then, the face was advanced by drum cutter up to the area excavated by steel frame. The operation cycle was completed in this way. Relative stability was obtained by using this technique. In this paper, technical reasons for choosing this technique was presented. Furthermore, using Flac 3D, its convergence was compared with that of the Austrian.

Keywords: NATM Method; Forepooling; Right-Left; Flac3D

1. INTRODUCTION

Excavating tunnel and other underground structures result in removing soil and rock mass and significant differences in level of stress in their surroundings. Choosing the most appropriate boring method is complicated and each method has some natural problems. As a result, the optimal method is referred to the method which has the least problems. The prerequisite for choosing the most appropriate method is having accesses to valid and useful data and information. Although engineering judgments and experiences are considered as the main method in choosing the boring method, intangible differences in properties of each region and high investment in huge construction projects call for scientific and systematic research so that engineers can analyze data in detail. Regarding the above-mentioned facts, the most recent boring method is going to be explained in this article.

2. GENERAL INTRODUCTION OF THE PLAN

In the mentioned plan, the reservoir dam is constructed on Narmab River. Having been constructed diversion dams of Chehel-Chai and Khormaloo, excess water of Chehel Chai and Khormaloo Rivers will be transmitted behind Narmab reservoir dam through a tunnel and channel. Narmab Dam will be constructed about 5 km from Minudasht in Golestan. This tunnel is 3175 m long and it has a 5 m excavation diameter. Its entry is considered to be situated 232.4 m above the sea level about 650 m in northwest of Nalaj Village in west bank of Chehel Chai River. Its exit is situated 226.75 m above the sea level in south of Aram Naro River in right bank of Narmab River.

2. 1. water conveyance tunnel Section

Cross section of the water conveyance tunnel is shown in figure 1. As observed, tunnel section will be 5 m in diameter and has a horseshoe shape. Maximum overburden will be 180 m. 10 cm of shotcrete has been used in temporary tunnel support system.

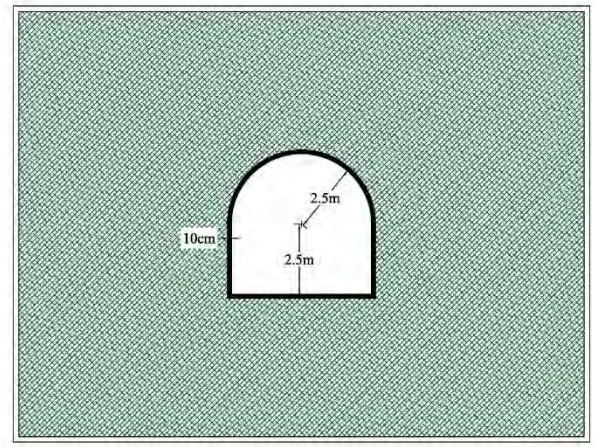

Figure 1: Tunnel section

3. TUNNEL GEOLOGY

In terms of geological divisions, the scope of plan is situated on the border/boundary of two zones of Gorgan-Dasht and Kopet Dag- Hezar Masjid. The major part of scope includes high mountains with general northeast- southwest trend. Regarding the vegetation of region, non-outcrops of formations and high weathering of rocks, 6 circles have been excavated in tunnel to recognize subsurface layers. Furthermore, in exit portal of the tunnel (right side of Narmab Dam), a discovery gallery which is 2 m in diameter and is 50 m long has been excavated. The tunnel passes through different geological formations (table 1). It will pass Shemshak formation (J_s^s) (shale and sandstone with coal seams), crushed contact zone, Khvosh Yeylaq formation (D_{kh}^{lm}) (limestone, marl and shale), fault and crushed zone, Milla formation (E_m^{lm}) (dolomitic lime) and Sultan Meydan formation (S^v) (Basalt and basaltic andesite) (fig. 2).

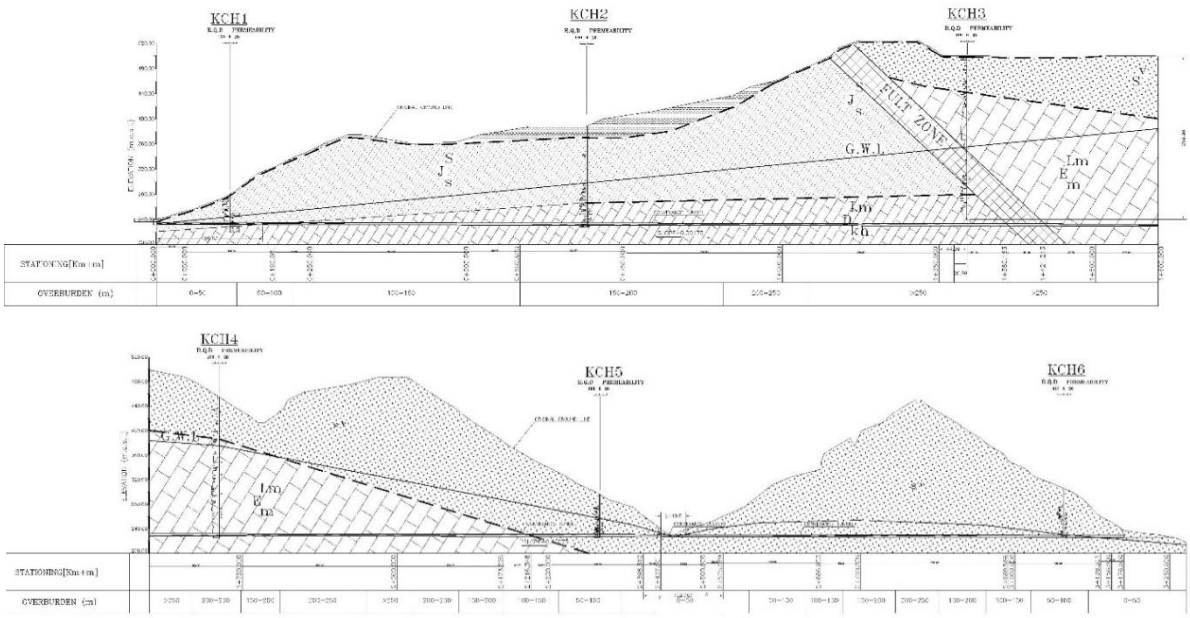

Figure 2: Geological Profile of Chehel Chai, Water Conveyance Tunnel

Table 1: Division of Rock Mass in Chehel Chai Water Conveyance Tunnel Site

Structural Phenomenon	Formation	Lithology	Chainage
Lithological Change	Shemshak	Alteration of sandstone, Shale and coal	0-200
Contact	Shemshak- Khvosh Yeylaq	Sandstone, shale and limestone	200-250
Lithological Change	Khvosh Yeylaq	Thin to medium limestone with shale and marl layers	250-1358
Disturbed Zone	Shemshak, Khvosh Yeylaq and Mila	Lime and dolomitic lime and black calcareous shale with oxide iron and calcite seams	1358-1425
Lithological Change	Mila	Dolomitic lime, sandstone and micaceous shale	1425-2220
Lithological Change	Sultan Meydan	Basalt and basaltic andesite	2220-3175

4. NATM

New Austrian tunneling method (NATM) can be regarded as a modern school in tunneling resulted in improving tunneling activities. In other words, unnecessary costs in tunneling has been decreased significantly while safety in tunneling procedure has been provided. Since there are many effective parameters in excavating and constructing an underground structure, the only way to decrease costs and provide safety is using the method which is flexible enough to make changes in design and construction. NATM is a method which has provided the mentioned flexibility in excavation, maintenance and instrumentation. Much application of this method in excavating tunnel in urban districts and imposing the least damage to buildings and urban infrastructure caused it to win attention of many engineers to apply it in excavating subway tunnels.

4. 1. Advantages of Using NATM

1. Flexibility in presenting different patterns of tunnel geometry and excavation
2. The need for tools and machineries with low cost
3. Flexibility in installing extra supports such as anchore
4. Easy installation of backup instruments and drainage
5. Flexibility in monitoring stresses and tunnel deformations
6. Better connection between earth and backup instruments
7. Easy shotcrete
8. Being applicable in most of geological conditions

5. FOREPOLING METHOD

One of the most common economic methods in excavating tunnels is strengthening tunnel crowns to avoid high strains and to save potential stability of earth by installing pipes in the roof of excavation face through which grouting is performed. Displacement of earth around tunnel space will result in deformation of earth and the adjacent surface of tunnel in turn resulting in settlement. Pipes have overlap to face ratio and are installed at a determined angle and situated in the site after the excavation operations. This method which was first applied to excavate and construct subway stations in Japan, is called forepoling. This method provides safety of excavation creating a longitudinal curve (an umbrella) along tunnel axis. In fact this method is independent from its surrounding region and decreases risk in the layer movement as well as lateral stress concentration.

5. 1. Advantages of Forepoling Method:

It has the following advantages:

1. Decreasing settlement in front of work front
2. Increasing stability of work front

3. Decreasing dimensions and number of supporters (shotcrete, steel frame, etc.)
4. Development of shearing section which makes it possible to use bigger machineries which in turn increase excavation speed.

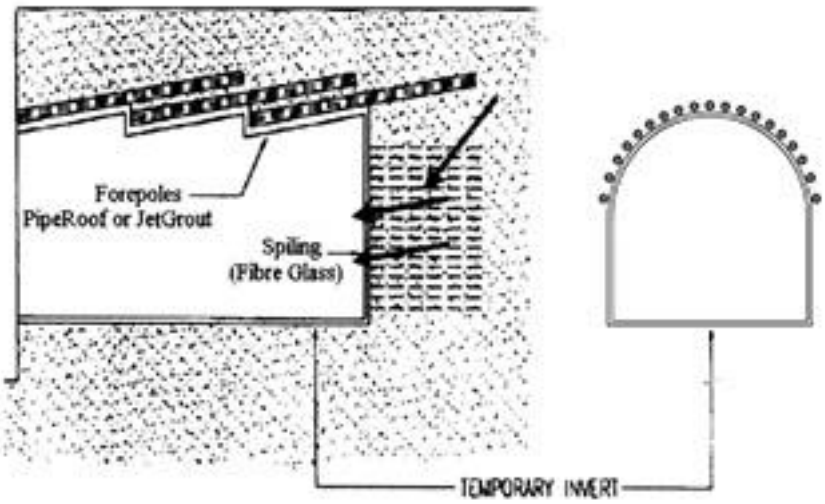

Figure 3: Geometry of Forepoling Pipes

6. MODELLING AND NUMERICAL ANALYSIS METHOD

Flac3D is based on finite difference method. Regarding the fact that rock mass around the tunnel is crushed and is considered homogenous and continuous, using the mentioned software is appropriate for analysis. Furthermore, this software is based on a computational *Lagrangian* plan which is suitable for modelling of huge deformations.

The numerical model includes a tunnel which is 580 m long with a horseshoe shape section which 5 m in diameter; moreover, tunnel crown has been situated in different depths of ground level. In order to decrease the effect of boundary on results, boundaries at tunnel sides are considered to be 10 times as much as the tunnel radius. Thus, the model dimensions have been attained to be 55m*55m. Figure 10 shows Geometric view of the model:

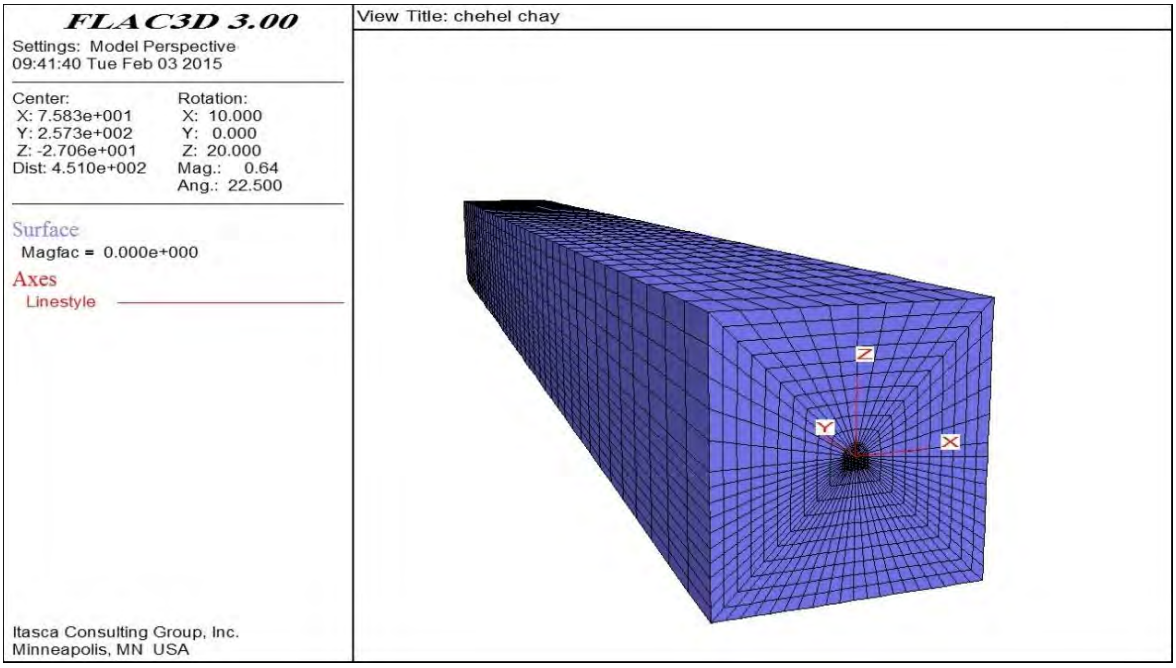

Figure 4: Tunnel Geometry (Side View)

Mohr-Coulomb model is the material behavior model used and implemented under large strain. Geomechanical properties of tunnel are explained in table 2:

Table 2: Properties of Materials in Chehel-Chai Tunnel

Parameters	0-128 m	128-190 m	190-219 m	219-580 m
C(MPa)	0.08	0.16	0.19	0.25
φ	45	37	36	32
E(GPa)	1.4	2.5	2.5	2.5
K(GPa)	0.93	1.6	1.6	1.6
G(GPa)	0.56	1	1	1
ν	0.25	0.25	0.25	0.25

Density= 0022 Kg/m^3

Horizontal to vertical stress factor (K) is calculated using the following equation and inserted for the preliminary balance.

$$K=\frac{\upsilon}{1-\upsilon}$$

It also should be mentioned that pore water pressure exists in 485 to 490 km.

The model was drawn and geomechanical properties, in-situ stress and boundary conditions were applied.

the excavation according to tunnel design is 2 meters, it has been used to excavate up to 485 m. regarding figure 5, it can be understood that maximum displacement occurred in tunnel roof and floor. Thus, it can be concluded that stress has been released in tunnel roof and floor and regarding the form of tunnel section, stress concentration has been transmitted to walls.

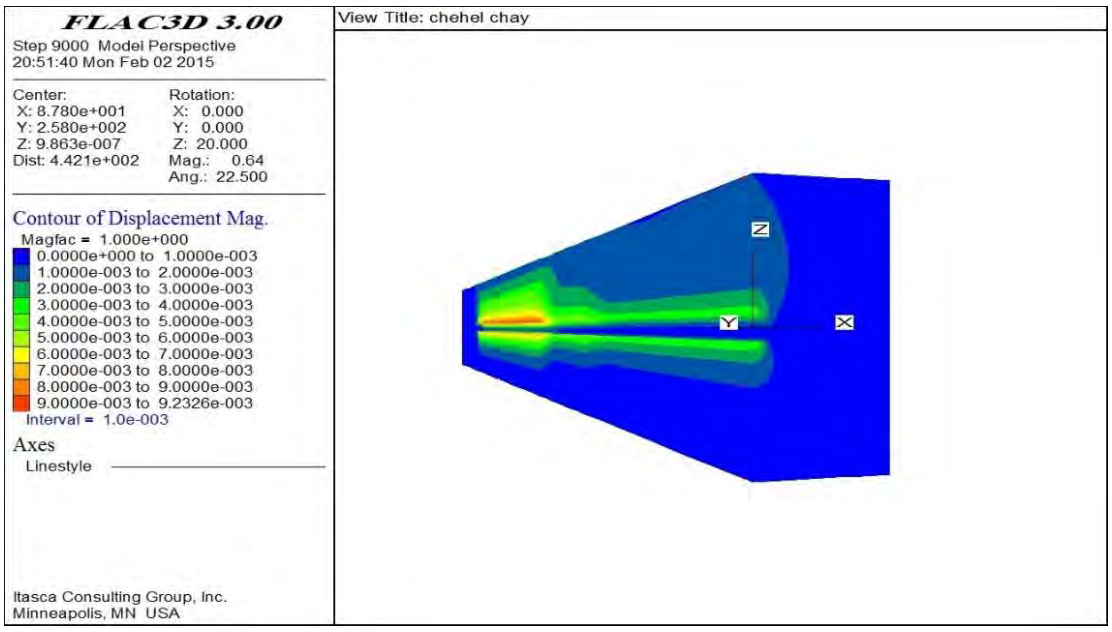

Figure 5: Maximum Displacement of Excavation up to 485 m (a View of Half of the Model)

Then we reached to 485 to 488m for excavation. Some other factors like pore pressure cause some displacements in this section. Pore pressure in this section causes unallowable displacement & Collapse in blocks. That shows an unstable section & make Further excavation by previous method, impossible.

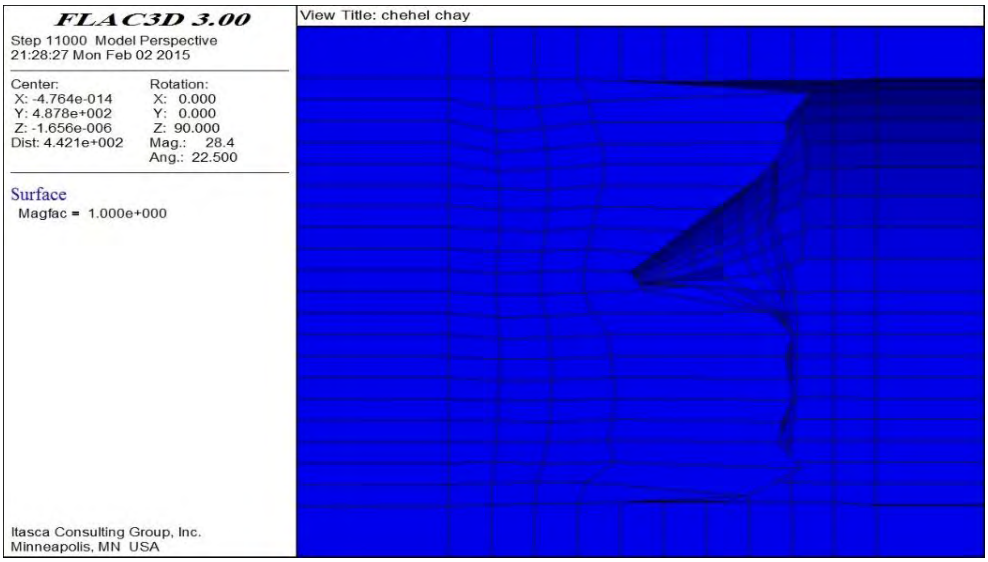

Figure 6: 485 to 488 m Displacement (A View of Half of the Model)

Forepoling was used to make rest of the excavation of the unstable section of water conveyance tunnel possible and to reach to a relatively stable section so that we can continue excavating using a new invented elective method of *left and right*; to this end, 485 to 488 m was modelled independently. Having been finished grouting, excavation operations are facilitated.

7. INTRODUCING LEFT AND RIGHT TECHNIQUE

Unfortunately, due to many displacements we face during excavation, NATM cannot be used for this section of water conveyance tunnel. Therefore, we introduced a new technique called *left and right*. This technique was first used in Iran for Chehel-Chai water conveyance tunnel.

Figure 7: Excavation Work Front

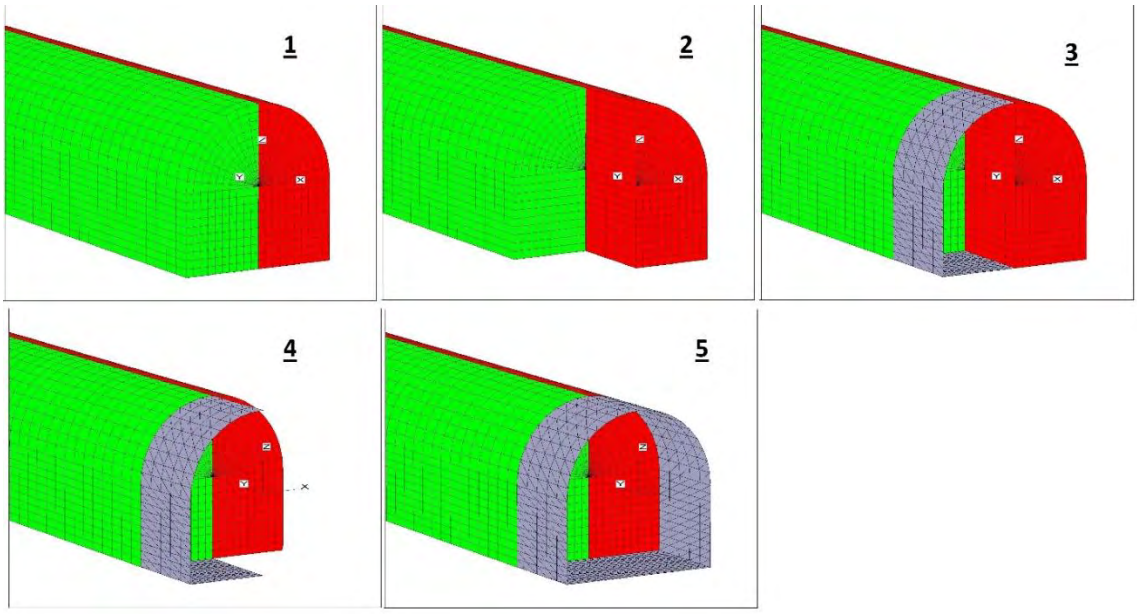

Figure 8: Stages of Left &Right Technique

As observed in figure 8, in this technique, tunnel is divided into left and right sections (first step). At first, the left side is excavated (second step). Then, a shot layer, thickness of 10 cm is used (the third step). Then, the right side is excavated (the fourth step) and the same coverage system similar to the left part is used (the fifth step) and so the process continued. The relative stability is achieved by applying this technique. The most important advantage of this technique compared to NATM is that the former has a better practicability in water conveyance tunnels with small cross section. Reasons for applying this technique were examined by FLAC^{3D} and was approved by showing plots. For the three-meter length which we face with collapse, the technique mentioned was used results of which are as follows:

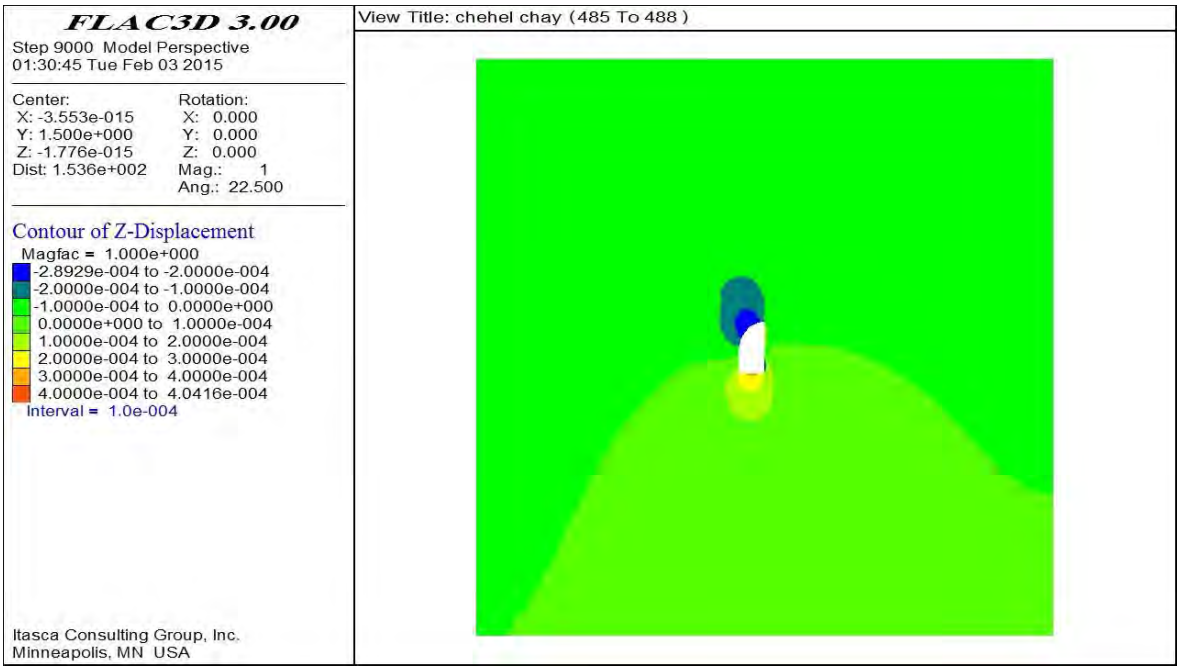

Figure 9: Vertical Displacement Contour (in Z direction) Achieved by Excavating Left Section of Tunnel

Excavating the right section, following results are achieved:

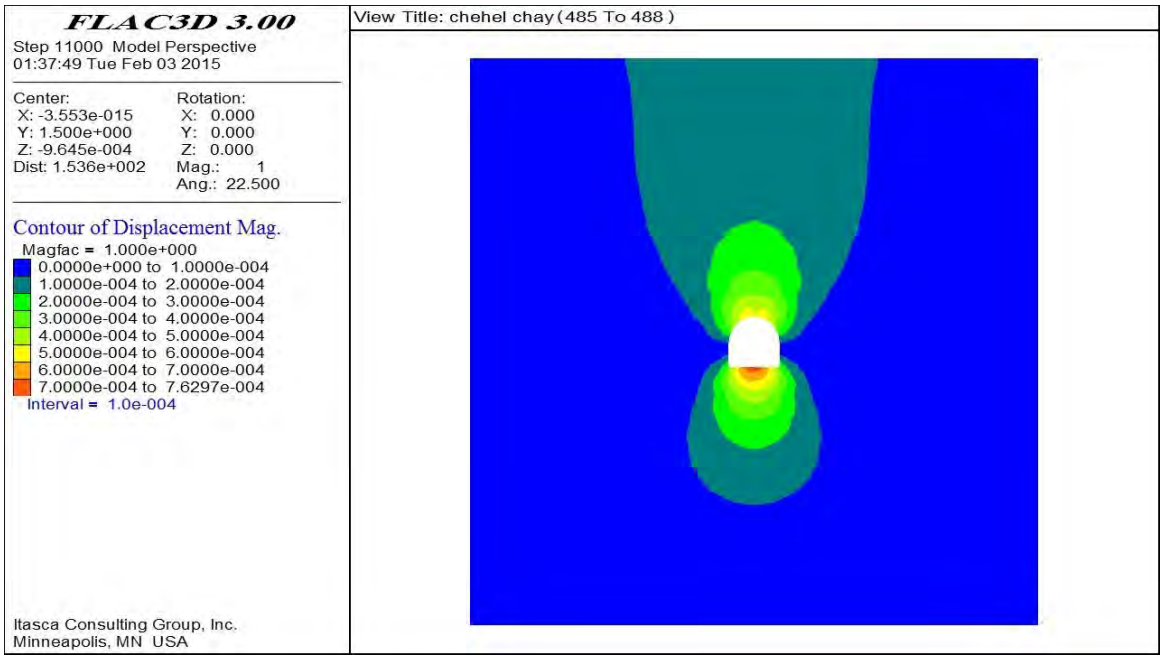

Figure 10:Displacement Contour Achieved by Excavating Right Section of Tunnel (the Second Stage)

As shown from plots achieved, by implementing this method, vertical displacement will be decreased and reached to 0.6 mm which is considered as one of the advantages of *left and right* technique. Chehel Chai Water Conveyance Tunnel excavation between stations of 485 to 520 was done by Left&Right method and it was successful.

8. CONCLUSION:

Applying the new approach excavating left and right technique, displacement of unstable section became normal; thus, it is appropriate to apply this technique for very falling sections.

Widespread application of left and right technique in projects with small cross sections especially water conveyance tunnels can provide the potential for applying them in Iran as well. Anyway, practical methods and techniques of implementing this new method is receivable through analyzing practical cases applied to Chehel-Chai water conveyance tunnel.

New approach tunneling, left and right, can be regarded as a new school in tunneling improving tunneling activities. By improvement, we mean allocating unnecessary costs in tunneling will be decreased and safety will be increased.

Furthermore, positive effect of left and right technique in Chehel-Chai tunnel was studied. First, the tunnel was modelled using Flac3D and stability analysis was performed. Results showed that by decreasing displacement for $\frac{1}{5000}$ in roof and wall, left & right technique is considered as an appropriate option to overcome the collapse of tunnel; therefore, this method can be used to restart tunneling operations.

This method can be used in water conveyance tunnels which have small cross sections and are excavated in weak and loose grounds where settlement risk is highly significant.

REFERENCES

[1] D.Hadizade, M.Akhtari, M.alavi and M.bahrami , ‘Evaluation of tunnel excavation using Forepoling and its impact on projects’ 6th National Congress on Civil Engineering 2011

[2] Gashtabi, k.Bagherzade , P.Bagherzade, ‘The umbrella of the tunnel in the ground loose and falling (Case tunnel axis Taleghan - Hashtgerd) ‘2nd National Conference on Stracture, Earthquake and Geotechnics 2012

[3] M.Delforozi , F.Hadiniya , H.barati , M.Charami, ‘NATM tunneling method of execution methods in the field of drilling ‘ 3nd National Conference on Dam and Hydropower (2011) Tehran

[4] M.Ramzani , GH.Lashkari por ,M.Ghafori ‘Rot risk assessment and estimation of the displacement in the direction of water tunnel Chehel Chai ‘2nd National Conference on Stracture, Earthquake and Geotechnics 2012

[5] Itasca Consulting Group, Inc. (2005), “FLAC 3D, Fast Lagrangian Analysis of Continua in 3Dimensions”.Users manual.

[6] Ocak, I., (2008), “Control of surface settlements with umbrella arch method in second stage excavations of Istanbul Metro,” Tunnelling and Underground Space Technology 23 (2008) 674–681

[7] Aksoy , C.O., Onargan, T., (2010), “The role of umbrella arch and face bolt as deformation preventing support system in preventing building damages,”. Tunnelling and Underground Space Technology 25 (2010) 553–559.

[8] W.L.Tan and P.G. Ranjith “Numerical Analysis of Pipe Roof Reinforcement in Soft Ground Tunneling“